TBM Bi-Metal Thermometer

Description & Features:

- A general purpose, versatile 1” (25mm) to 6” (150mm) dial, 304 stainless steel thermometer
- Bi-metallic sensing element for reliable readings
- Back, bottom or adjustable angle connection
- Welded stem length from 2.5” (63mm) and up
- ±1% accuracy
- Anti-parallax dial that reduces operator reading errors (3” (75mm)-6” (150mm))
- Recalibrator screw is standard on all dial sizes
- Use with TBR or TWF thermowells
- ASME B40.200 compliant
- 5 year warranty

Applications:

- Industrial process, heating and air conditioning, ventilation and waste water
- Commercial installations such as barbecues, home brewing systems and cooking devices

Specifications	
Dial	1” (25mm), 2” (50mm): Aluminum with black markings, flat dial 3” (75mm), 4” (100mm), 5” (127mm), 6” (150mm): Aluminum with black markings, anti-parallax dial
Case	AISI 304 SS
Stem	AISI 304 SS welded to socket, centre back, bottom or adjustable angle configurations (316 SS optional*) 1” (25mm), 2” (50mm) dial: Centre back connection only
Recalibrator Screw	Standard
Lens	1” (25mm): Polycarbonate Others: Glass standard, hermetically sealed
Ring	AISI 304 SS
Connection	1” (25mm): None 2” (50mm): 1/4” NPT standard 3” (75mm), 4” (100mm), 5” (127mm), 6” (150mm): 1/2” NPT standard
Sensing Element	Bi-metallic coil
Pointer	Aluminum, painted black
Maximum Operating Pressure	125 psi (861 kPa)
Operating Temperature	75% of full scale value (recommended maximum)
Ambient Temperature	-58°F to 248°F (-50°C to 120°C)
Accuracy	±1% of full scale
Enclosure Rating	2” (50mm) to 6” (150mm): IP68

*Contact Winters for 316 SS requirements
Note: The use of a thermowell is recommended to protect the thermometer in corrosive or pressure applications, as well as to maintain a closed system during its removal from the process

Order Codes (products in bold are normally stock in North America)

1” (25mm) Dial, Fixed Centre Back	
Temperature Range	5” Stem Length Code
-40°F to 160°F	TBM10050B15
0°F to 250°F	TBM10050B19
50°F to 500°F&C	TBM10050B11

2” (50mm) Dial, Fixed Centre Back		
Temperature Range	2.5” Stem Length Code	4” Stem Length Code
-40°F to 120°F&C	TBM20025B2	-
0°F to 200°F&C	TBM20025B6	-
0°F to 240°F&C	-	TBM20040B7
0°F to 250°F&C	TBM20025B8	TBM20040B8
50°F to 300°F&C	TBM20025B9	-
50°F to 400°F&C	TBM20025B10	-
50°F to 500°F&C	TBM20025B11	-

3” (75mm) Dial, Fixed Centre Back				
Temperature Range	2.5” Stem Length Code	4” Stem Length Code	6” Stem Length Code	9” Stem Length Code
-40°F to 120°F&C	TBM30025B2	-	TBM30060B2	-
0°F to 140°F&C	TBM30025B3	-	-	-
-40°F to 160°F&C	TBM30025B4	-	-	-
0°F to 200°F&C	TBM30025B6	TBM30040B6	TBM30060B6	-
20°F to 240°F&C	TBM30025B7	TBM30040B7	TBM30060B7	-
0°F to 250°F	TBM30025B19	TBM30040B19	-	-
0°F to 250°F&C	TBM30025B8	TBM30040B8	TBM30060B8	TBM30090B8
50°F to 300°F&C	TBM30025B9	TBM30040B9	TBM30060B9	TBM30090B9
50°F to 400°F&C	TBM30025B10	TBM30040B10	TBM30060B10	-
50°F to 500°F&C	TBM30025B11	TBM30040B11	TBM30060B11	TBM30090B11
150°F to 750°F&C	-	-	TBM30060B12	TBM30090B12
200°F to 1,000°F&C	-	-	TBM30060B13	-

3” (75mm) Dial, Bottom		
Temperature Range	2.5” Stem Length Code	4” Stem Length Code
0°F to 200°F	TBM31025B17	-
0°F to 200°F&C	TBM31025B6	-
0°F to 250°F&C	TBM31025B8	-
20°F to 240°F&C	TBM31025B7	TBM31040B7
50°F to 500°F&C	-	TBM31040B11

3” (75mm) Dial, Adjustable Angle		
Temperature Range	2.5” Stem Length Code	4” Stem Length Code
0°F to 200°F&C	TBM32025B6	TBM32040B6
0°F to 250°F&C	TBM32025B8	TBM32040B8
50°F to 300°F&C	TBM32025B9	-

5” (127mm) Dial, Fixed Centre Back				
Temperature Range	2.5” Stem Length Code	4” Stem Length Code	6” Stem Length Code	9” Stem Length Code
-40°F to 120°F&C	TBM50025B2	-	TBM50060B2	TBM50090B2
0°F to 140°F&C	TBM50025B3	-	-	-
20°F to 240°F&C	TBM50025B7	-	-	-
0°F to 250°F&C	TBM50025B8	TBM50040B8	-	-
50°F to 300°F&C	TBM50025B9	TBM50040B9	TBM50060B9	-
50°F to 500°F&C	TBM50025B11	-	TBM50060B11	-
150°F to 750°F&C	-	TBM50040B12	TBM50060B12	-

5” (127mm) Dial, Adjustable Angle				
Temperature Range	2.5” Stem Length Code	4” Stem Length Code	6” Stem Length Code	9” Stem Length Code
0°F to 140°F&C	TBM52025B3	TBM52040B3	TBM52060B3	-
-40°F to 160°F&C	-	TBM52060B4	-	-
0°F to 200°F&C	-	TBM52040B6	-	-
20°F to 240°F&C	TBM52025B7	-	-	-
0°F to 250°F&C	TBM52025B8	TBM52040B8	TBM52060B8	TBM52090B8
50°F to 300°F&C	-	TBM52040B9	-	-

TBM Bi-Metal Thermometer

Order Codes: To order, specify the code for each dial/stem length and the range: i.e. TBM20025 - B26

Dial Size	Stem Length	Fixed Centre Back	Bottom	Adjustable Angle
1" (25mm) pocket thermometer	5" (127mm)	TBM10050	-	-
2" (50mm) lab thermometer	8" (200mm)	TBM20080	-	-
2" (50mm)	2.5" (63mm)	TBM20025	-	-
	4" (100mm)	TBM20040	-	-
	6" (150mm)	TBM20060	-	-
	9" (230mm)	TBM20090	-	-
	12" (300mm)	TBM20120	-	-
	15" (370mm)	TBM20150	-	-
3" (75mm)	2.5" (63mm)	TBM30025	TBM31025	TBM32025
	4" (100mm)	TBM30040	TBM31040	TBM32040
	6" (150mm)	TBM30060	TBM31060	TBM32060
	9" (230mm)	TBM30090	TBM31090	TBM32090
	12" (300mm)	TBM30120	TBM31120	TBM32120
	15" (370mm)	TBM30150	TBM31150	TBM32150
4" (100mm)	2.5" (63mm)	TBM40025	TBM41025	TBM42025
	4" (100mm)	TBM40040	TBM41040	TBM42040
	6" (150mm)	TBM40060	TBM41060	TBM42060
	9" (230mm)	TBM40090	TBM41090	TBM42090
	12" (300mm)	TBM40120	TBM41120	TBM42120
	15" (370mm)	TBM40150	TBM41150	TBM42150
5" (127mm)	2.5" (63mm)	TBM50025	TBM51025	TBM52025
	4" (100mm)	TBM50040	TBM51040	TBM52040
	6" (150mm)	TBM50060	TBM51060	TBM52060
	9" (230mm)	TBM50090	TBM51090	TBM52090
	12" (300mm)	TBM50120	TBM51120	TBM52120
	15" (370mm)	TBM50150	TBM51150	TBM52150
6" (150mm)	2.5" (63mm)	TBM60025	TBM61025	TBM62025
	4" (100mm)	TBM60040	TBM61040	TBM62040
	6" (150mm)	TBM60060	TBM61060	TBM62060
	9" (230mm)	TBM60090	TBM61090	TBM62090
	12" (300mm)	TBM60120	TBM61120	TBM62120
	15" (370mm)	TBM60150	TBM61150	TBM62150

°F & °C (Dual)	Code	°F only	Code	°C only	Code	ºC & ºF (Dual)	Code
-100°F to 150°F & -70°C to 70°C	B1	-40°F to 120°F	B14	-80°C to 50°C	B26	-30ºC to 70ºC & -20ºF to 150ºF	B75
-40°F to 120°F & -40°C to 50°C	B2	-40°F to 160°F	B15	-50°C to 50°C	B27	0ºC to 120ºC & 30ºF to 250ºF	B76
0°F to 140°F & -20°C to 60°C	B3	0°F to 140°F	B16	0°C to 50°C	B28	0ºC to 300ºC & 30ºF to 570ºF	B77
-40°F to 160°F & -40°C to 70°C	B4	0°F to 200°F	B17	-50°C to 100°C	B29	0ºC to 200ºC & 30ºF to 400ºF	B79
25°F to 125°F & - 5°C to 50°C	B5	20°F to 240°F	B18	0°C to 100°C	B30	0ºC to 250ºC & 30ºF to 480ºF	B80
0°F to 200°F & -20°C to 90°C	B6	0°F to 250°F	B19	-20°C to 120°C	B31	0ºC to 50ºC & 30ºF to 120ºF	B81
20°F to 240°F & - 5°C to 115°C	B7	50°F to 300°F	B20	0°C to 150°C	B32	-20ºC to 60ºC & -4ºF to 140ºF	B85
0°F to 250°F & -20°C to 120°C	B8	50°F to 400°F	B21	0°C to 200°C	B33	-	-
50°F to 300°F & 10°C to 150°C	B9	50°F to 550°F	B22	0°C to 300°C	B34	-	-
50°F to 400°F & 10°C to 200°C	B10	150°F to 750°F	B23	0°C to 450°C	B35	-	-
50°F to 500°F & 10°C to 260°C	B11	0°F to 800°F	B24	100°C to 550°C	B36	-	-
150°F to 750°F & 70°C to 400°C	B12	200°F to 1,000°F	B25	0°C to 500°C	B39	-	-
200°F to 1,000°F & 100°C to 550°C	B13	14°F to 140°F	B38	-10°C to 60°C	B40	-	-
14°F to 140°F & -10°C to 60°C	B37	-	-	100°C to 400°C	B41	-	-
32°F to 212°F & 0°C to 100°C	B52	-	-	100°C to 540°C	B42	-	-
32°F to 140°F & 0°C to 60°C	B84	-	-	-30°C to 70°C	B45	-	-
-60°F to 300°F & -50°C to 150°C	B86	-	-	20°C to 120°C	B46	-	-
-	-	-	-	-30°C to 170°C	B47	-	-
-	-	-	-	0°C to 120°C	B48	-	-
-	-	-	-	0°C to 400°C	B49	-	-
-	-	-	-	0°C to 250°C	B50	-	-
-	-	-	-	20°C to 60°C	B51	-	-
-	-	-	-	0°C to 60°C	B82	-	-

Other ranges, stem lengths and connection sizes available upon request. For glycerin fill, maximum temperature limit is 300°F (150°C). Silicone fill available.

Option suffix for above order code only:

AP3 = 3" (75mm) acrylic lens
AP4 = 4" (100mm) acrylic lens
AP5 = 5" (127mm) acrylic lens
AP6 = 6" (150mm) acrylic lens
BG3 = 3" (75mm) glycerin filling
BG4 = 4" (100mm) glycerin filling
BG5 = 5" (127mm) glycerin filling
BG6 = 6" (150mm) glycerin filling
DUCT = Aluminum duct flange
RSP4 = 4" (100mm) Red set pointer
RSP5 = 5" (127mm) Red set pointer
RSP6 = 6" (150mm) Red set pointer
SCK = Socket conversion kit
SPG3 = 3" (75mm) Shatterproof glass lens
SPG4 = 4" (100mm) Shatterproof glass lens
SPG5 = 5" (127mm) Shatterproof glass lens
SPG6= 6" (150mm) Shatterproof glass lens

Note: The use of a thermowell is recommended to protect the thermometer from corrosive or damaging environments, as well as to maintain a closed system during its removal from the process

1” Back Connection

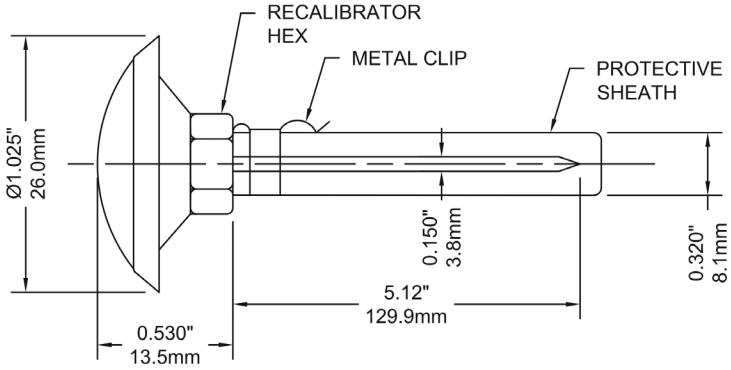

2” Back Connection

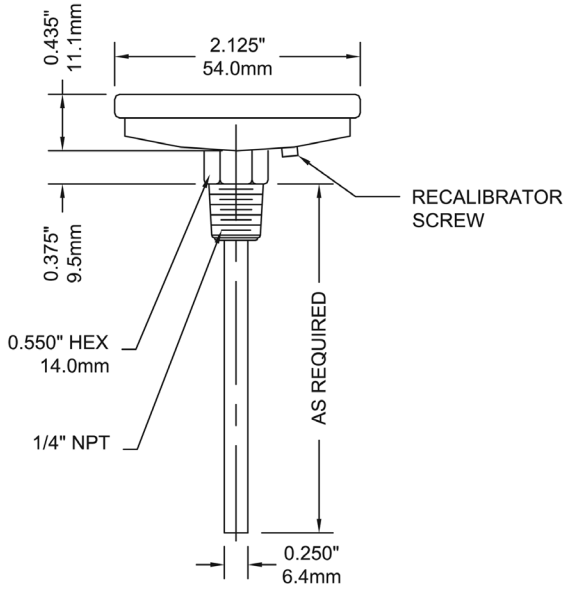

3” Adjustable Angle Connection

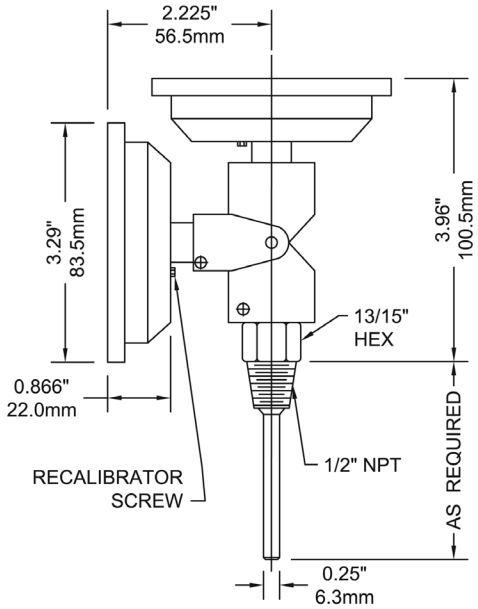

4” Back Connection

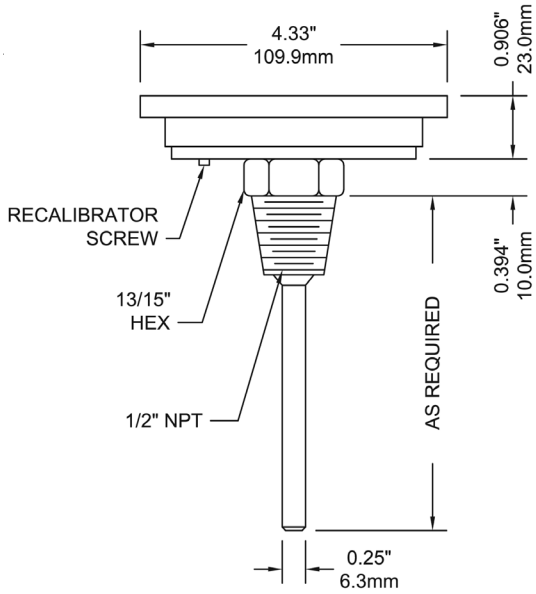

5” Bottom Connection

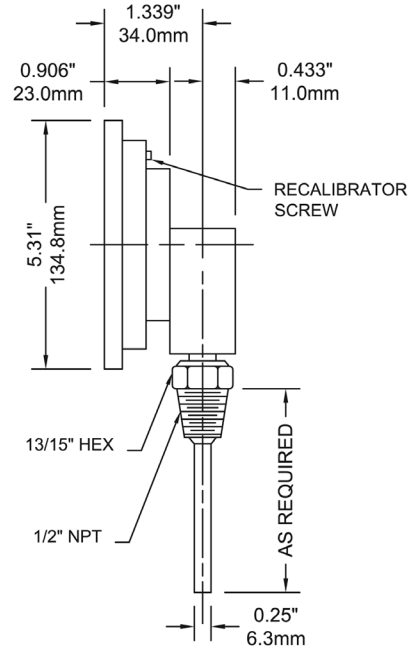

5” Adjustable Angle Connection

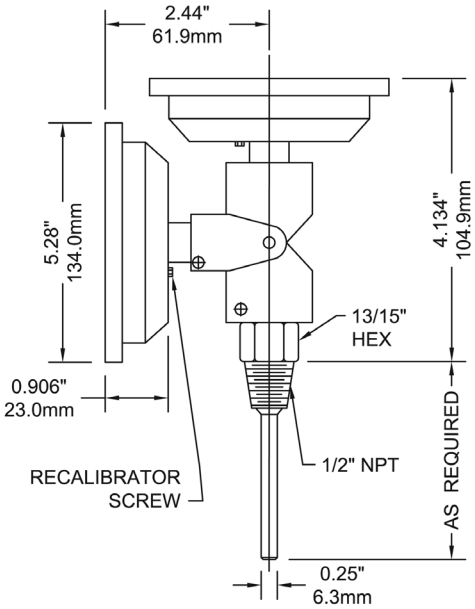

6” Back Connection

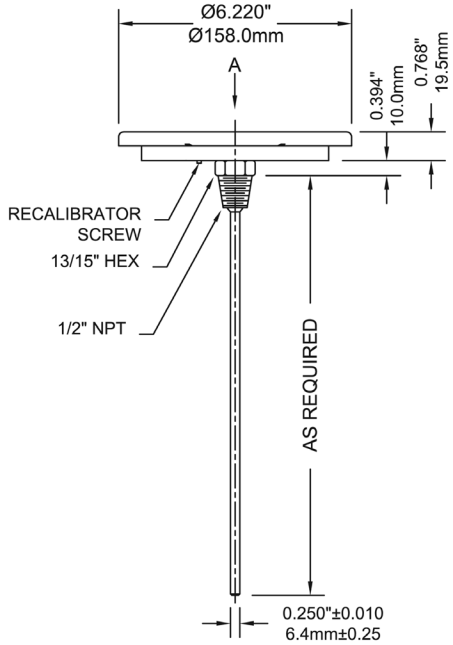
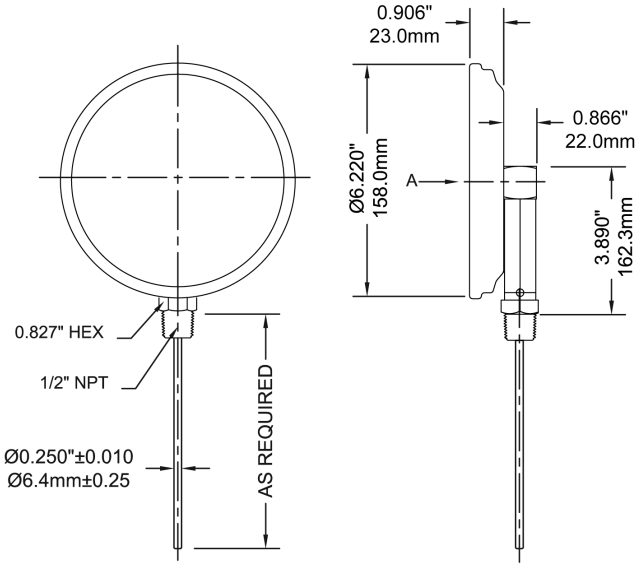
6” Bottom Connection